Assembly Instructions

Gooseneck Tablet Roll Stand

Amico

Preface

PLEASE READ CAREFULLY

Thank you for your purchase with Amico Accessories Inc.

The Amico Roll Stand is designed for long lasting performance, provided the user complies with assembly and maintenance procedures. This instruction manual is your guide to ensuring that you get the best performance out your equipment. Amico Accessories is not responsible for any damage as a result of (but not limited to) abuse and other malfunctions that may be a direct or indirect result of failure to comply with the instructions provided in this manual.

Precautionary Symbols You Will Find in This Manual

WARNING Steps where extra care should be taken to prevent injuries and damage.

NOTE Steps that point out helpful information.

Responsibility of Medical Facilities

Preventive maintenance checks must be performed regularly to maintain the quality and performance of this product. Any parts that may be broken, missing, worn, distorted or contaminated in any way should not be used and all affected parts should be replaced immediately. Should the necessity of any repair be suspected; please contact your local Amico distributor.

PRECAUTIONS

WARNING: IT IS THE INSTALLER'S RESPONSIBILITY TO ENSURE ALL COMPONENTS ARE PROPERLY ASSEMBLED AND INSTALLED USING THE PROVIDED INSTRUCTION MANUAL.

WARNING: EXCEEDING WEIGHT CAPACITIES CAN RESULT IN SEVERE PERSONAL INJURY OR DAMAGE TO YOUR EQUIPMENT. IT IS THE INSTALLER'S RESPONSIBILITY TO ENSURE THE COMBINED WEIGHT OF ALL COMPONENTS DOES NOT EXCEED THE WEIGHT CAPACITY LISTED IN PRODUCT CLASSIFICATION ON PAGE 3 AND 4 OF THIS MANUAL.

WARNING: DO NOT PLACE ROLL STAND ON AN INCLINE GREATER THAN 10 DEGREES OR UNIT MAY TIP.

WARNING: ALWAYS USE LOCKS ON CASTERS WHEN EQUIPMENT IS NOT IN USE TO PREVENT UNWANTED MOVEMENT.

Table of Contents

Section 1: Product Specifications **3**
Options Matrix 3

Section 2: Assembly Preparation **4**
Tools Required 4
What's in the Box? 4

Section 3: Assembly **5-16**
Connect Roll Stand Post to Base 5
Connect Gooseneck to Roll Stand Post 5-6
Connecting Powered Gooseneck to Roll Stand Post 7
Mount Integrated Power Adapter (Optional) 8-9
Installing a Tablet 9
Adjustments 10
Mount the Handle (Optional) 11
Installing Extender Plates for Larger Tablets (RS8-UPGRD-TB13) 11-14
Instructions to Install Thicker Tablet Kit (RS8-UPGRD-TB13) 14-15
Mounting the Basket (Optional) 16

Section 4: Troubleshooting, Maintenance and Product Classification **17**
Troubleshooting Guide 17
Preventative Maintenance 17
Cleaning 17

Warranty Information **18**

Section 1: Product Specifications

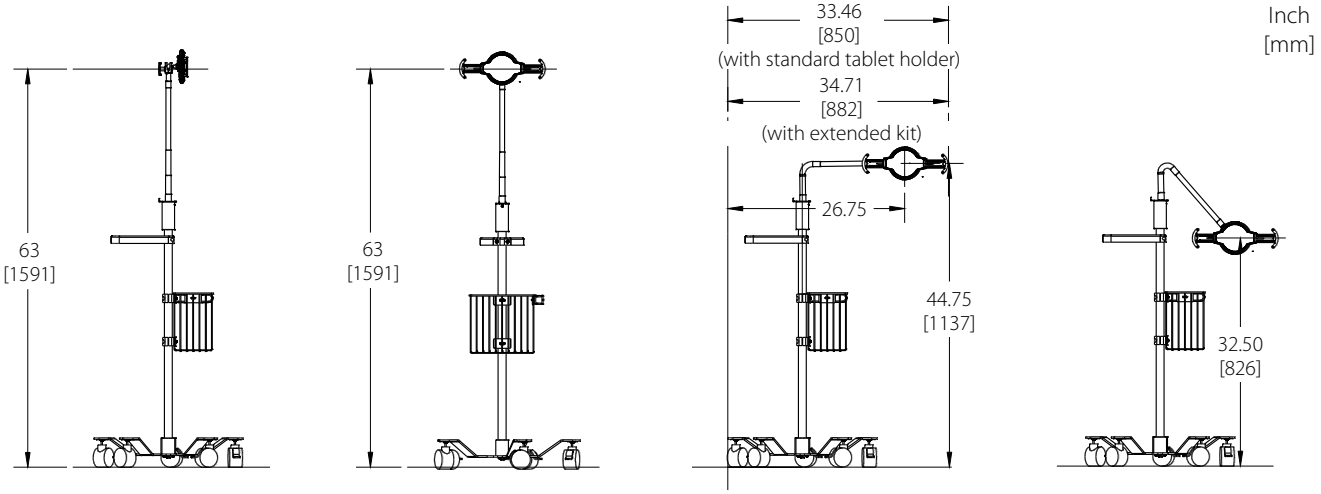

Options Matrix

RS8 - 421 - V X Y - ZZZ

Locking Tablet Holder

H
11" - 13.5"
(27.94 cm -34.29 cm)
(outside, corner-to-corner dimension),
up to 0.4" thick.

E
13.5" - 15.5"
(34.29 cm - 39.37 cm)
(outside, corner-to-corner dimension),
up to 0.4" thick.

T
11" - 13.5"
(27.94 cm - 34.29 cm)
(outside, corner-to-corner dimension),
up to 0.8" thick.

B
13.5" - 15.5"
(34.29 cm - 39.37 cm)
(outside, corner-to-corner dimension),
up to 0.8" thick.

V
VESA mount, without locking tablet holder.

*** Outside corner-to-corner diagonal dimension 11" - 13.5" (27.94 cm - 34.29 cm).**

**** Outside corner-to-corner diagonal dimension 13.5" - 15.5" (34.29 cm - 39.37 cm).**

Integrated Power Adapter

N
Gooseneck without Integrated Power Adapter.

C
USB-C Cable through Gooseneck to secured coupling. *

L
Lightning Cable through Gooseneck to secured coupling. *

B
USB-C & Lightning Cable through Gooseneck to secured coupling. *

P
Secured coupling only, customer installs own cable on-site (North America only).

*** Includes 3' (0.9 m) Coiled Power Cable (extends to 6' (1.8 m) from secure coupling at base of Gooseneck).**

Power Cord Plug Type

0
No Power Cord
(Choose if you selected [N] for Integrated Power Adapter).

B
North America
(with ground pin).

I
Australia
(with ground pin).

K
Denmark
(with ground pin).

G
United Kingdom
(with ground pin).

F
Europe & Russia
(with ground port).

Accessory Package

000
No Accessories Added.

KT1
5" x 5" x 4"
(12.7 cm x 12.7 cm x 10.2 cm)
Basket with Cord Wrap + Handle.

PKG
10" x 6" x 9"
(25.4 cm x 15.2 cm x 22.9 cm)
Basket with Cord Wrap + Handle.

NOTE: Basket * - The maximum weight capacity of the basket is 10 lbs (4.54 kg).

Section 2: Assembly Preparation

Tools Required

1. 3/16" (47.6 mm) Hex key - not included
2. #2 Phillips head screwdriver - not included
3. 1/2" (1.27 cm) Socket wrench - not included
4. Utility knife - not included
5. 1/2" Socket tool - included

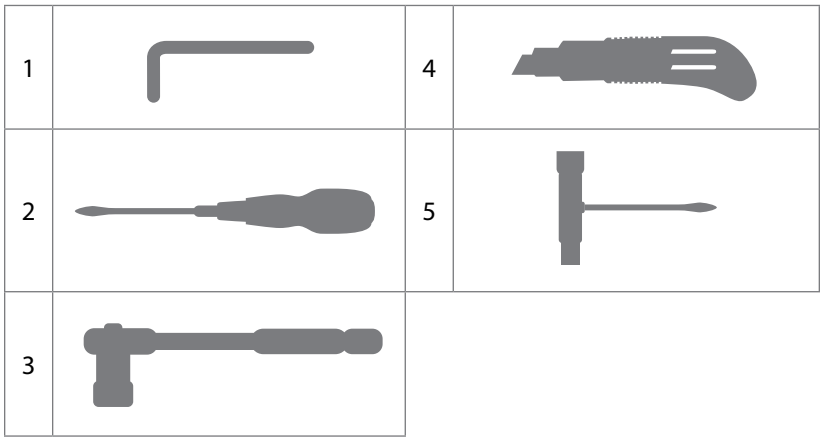

What's in the Box?

NOTE: Please ensure that your contents match the list as outlined below. If not, please contact Amico Accessories at 1-877-264-2697.

Base with Caster

Gooseneck with Tablet Holder

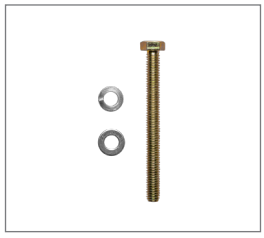
Gooseneck Hardware Kit

Gooseneck to Roll Stand Post

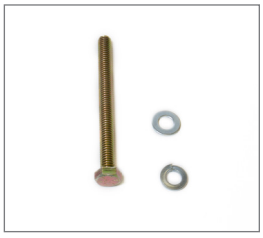
Post to Base Hardware Kit POST-HW-KIT

Tablet Head Mount

Tablet Head Mount Hardware Kit

Enclosure (Optional)

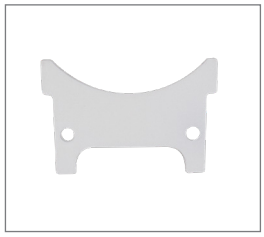
Stopper (Optional)

C14 Converter (Optional)

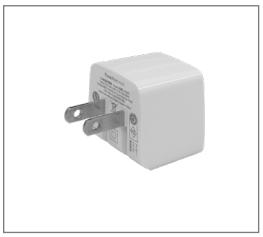
Integrated Power Adapter (Optional)

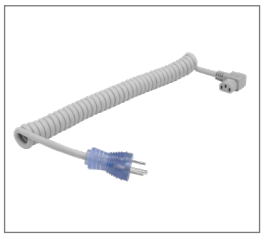
Power Cord (Optional)

100609 Basket with Cord Wrap (PKG models)

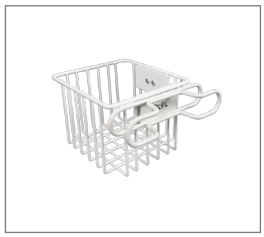
050504 Basket with Cord Wrap (KT1 models)

Handle and Hardware (PKG/KT1 models)

Section 3: Assembly

Connect Roll Stand Post to Base

1. Insert the *ROLL STAND POST* into the *BASE ADAPTER* at the top of the *BASE*. Using 1/2" (1.27 cm) Socket wrench with 6" (15.24 cm) extension and *POST HW-KIT* secure by inserting the *POST HW-KIT LARGE BOLT* through the *POST HW-KIT LOCK WASHER* and *POST HW-KIT SMALL WASHER* into the underside of the *BASE*, the *BASE ADAPTER,* and into the *ROLL STAND POST.* **(Figure 2)**

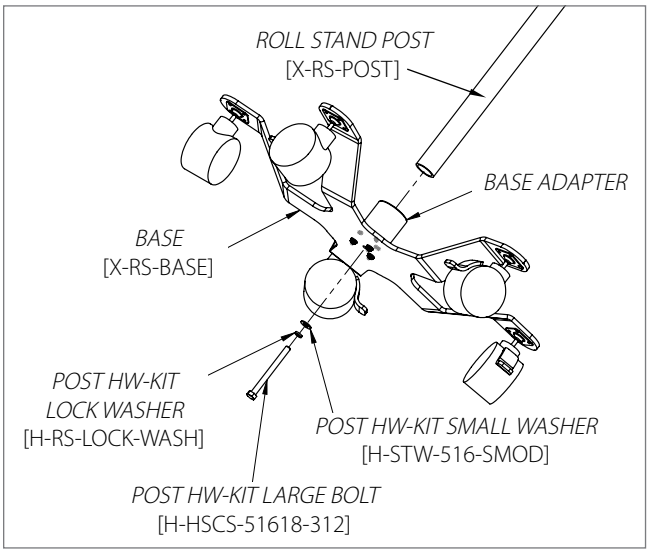

Figure 2

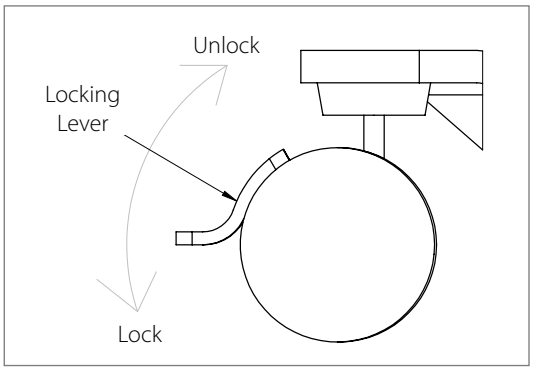

NOTE: To lock the casters, step on the locking level until it clicks in the down position. To unlock the caster, lift up the locking lever.

Connect Gooseneck to Roll Stand Post

1. Using a 1/2" (1.27 cm) Socket wrench with 6" (15.24 cm) extension and *GOOSENECK* to *ROLL STAND POST ADAPTER* (HEAD-HW KIT), insert the *HEAD HW-KIT LARGE BOLT* through the *HEAD-HW KIT LOCK WASHER*, then through the *HEAD-HW KIT SMALL WASHER*. Then, insert the bolt and washers into the top of the *TABLET HEAD MOUNT*, down into the *ROLL STAND POST.* **(Figure 1)**

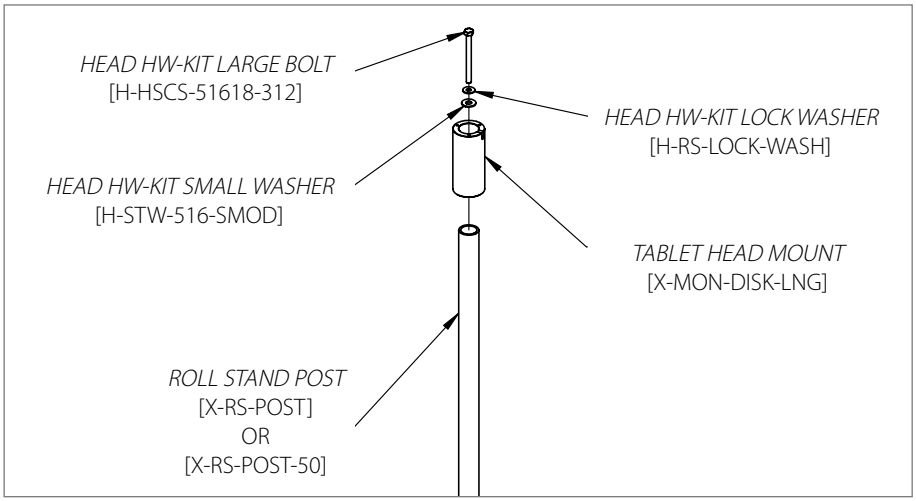

Figure 1

Section 3: Assembly

NOTE: HEAD-HW KIT contains the hardware necessary for this section.

NOTE: The GOOSENECK may have come with pre-installed power cable for the tablet OR you may need to run a power-supply wire through the *GOOSENECK*. Wires at the bottom of the *GOOSENECK* should be fed through the cable channel (notch in *GOOSENECK* to *ROLL STAND POST ADAPTER*).

2. Use the #2 Phillips head screwdriver, place the *GOOSENECK* with *TABLET MOUNT* on top of the *GOOSENECK* to *ROLL STAND POST ADAPTER MOUNT* and secure with 3x *GOOSENECK HW-KIT SCREWS*. **(Figure 2)**

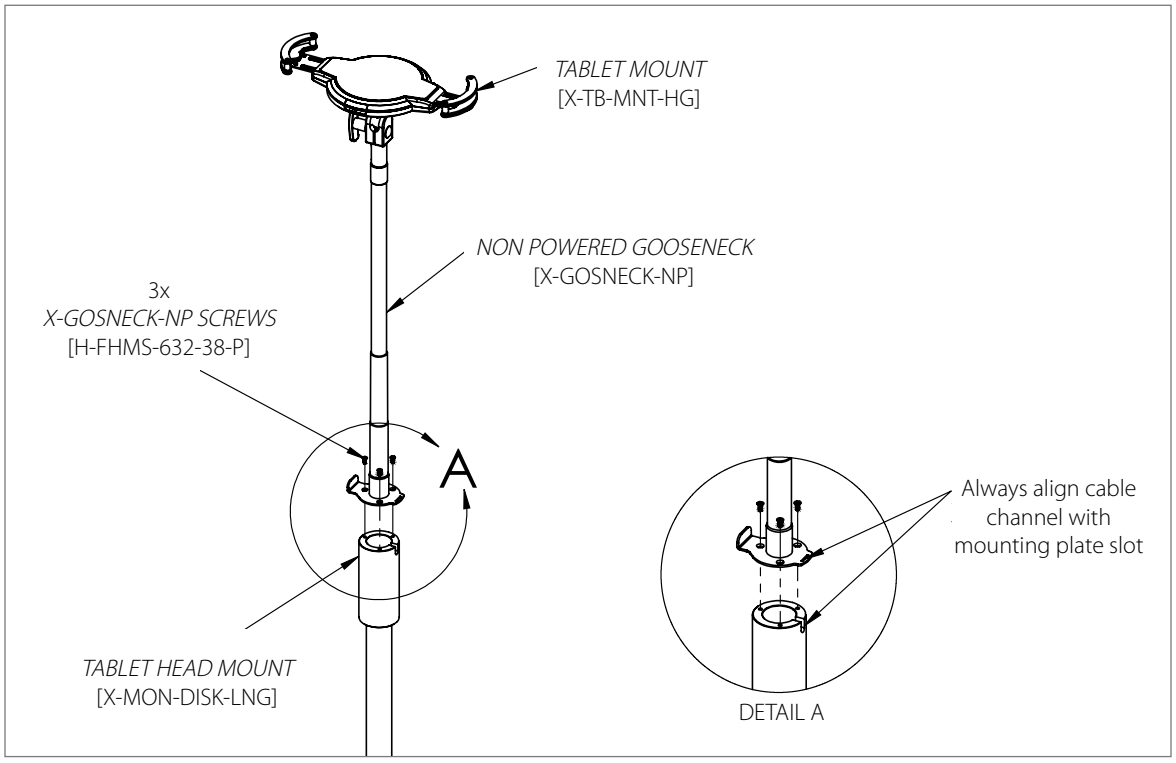

Figure 2

NOTE: GOOSENECK-HW KIT contains the hardware necessary for this section.

NOTE: Always align the *GOOSENECK* to *ROLL STAND POST ADAPTER* (small notch at top of adapter) cable channel with *GOOSENECK* mount plate slot cut as shown below.

Section 3: Assembly

Connecting Powered Gooseneck to Roll Stand Post

1. Use #2 Phillips head screwdriver, place the *POWERED GOOSENECK* with *TABLET HEAD MOUNT* on top of the *TABLET HEAD MOUNT* and secure with 3x *GOOSENECK HW-KIT SCREWS*. **(Figure 1)**

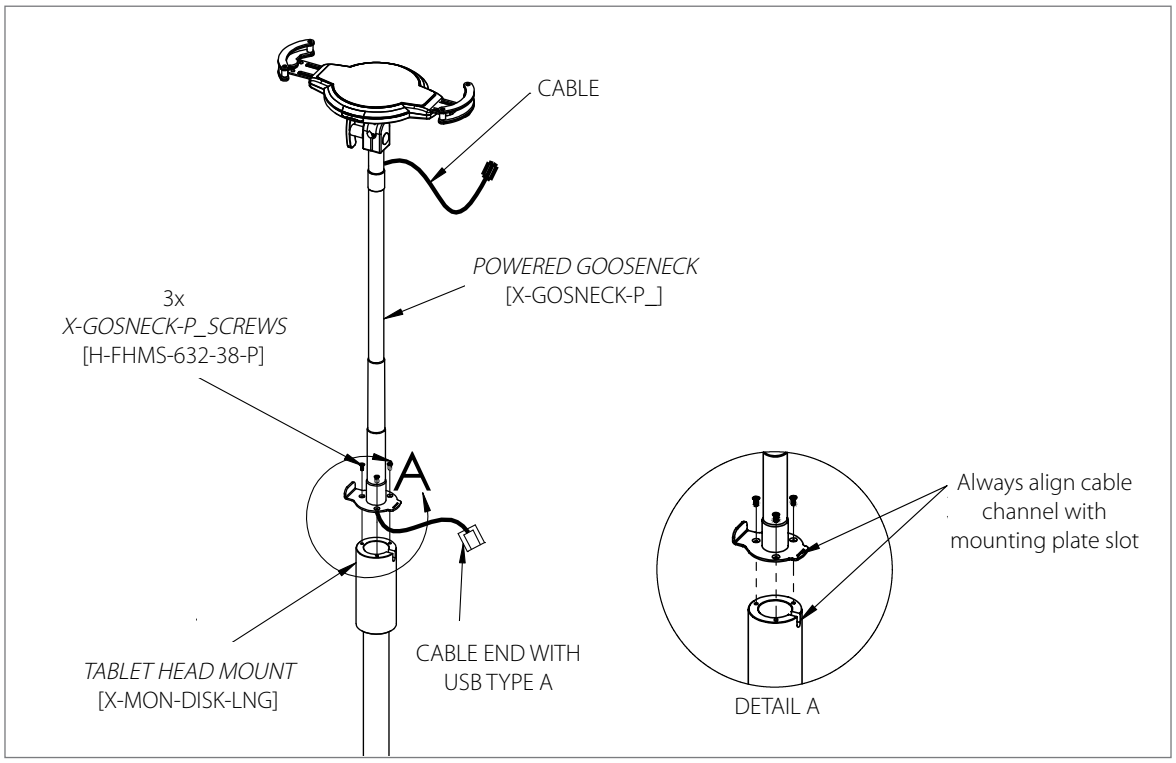

Figure 1

NOTE: Pass the cable through the *TABLET HEAD MOUNT* top open channel as shown below. Always align the *TABLET HEAD MOUNT* cable channel with *GOOSENECK* mount plate slot cut as shown in below.

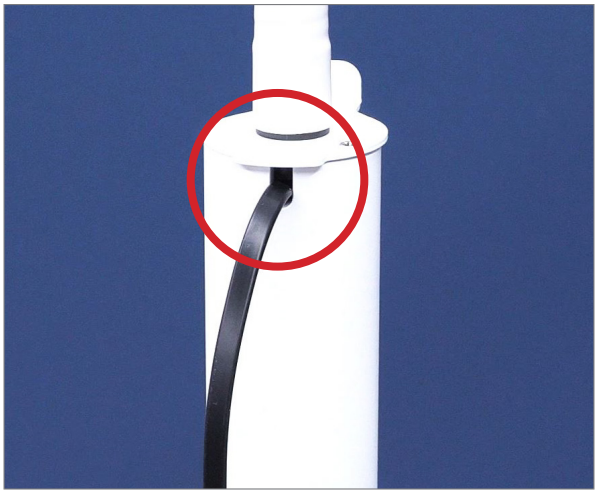

Figure 2

Section 3: Assembly

Mount Integrated Power Adapter (Optional)

GSNCK-HW Kit

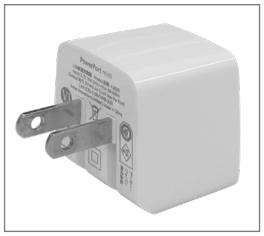

NEMA 5 PLUG

C14 CONVERTER

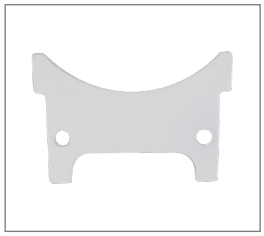

STOPPER

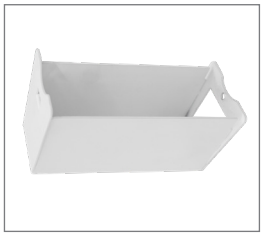

ENCLOSURE

NOTE: GSNCK-HW KIT contains the hardware necessary for this section.

1. Insert the C14 CONVERTER from the bottom of the ENCLOSURE all the way inside then slides the STOPPER plate into the ENCLOSURE bottom slot to stop the C14 CONVERTER slide down. **(Figure 1)**

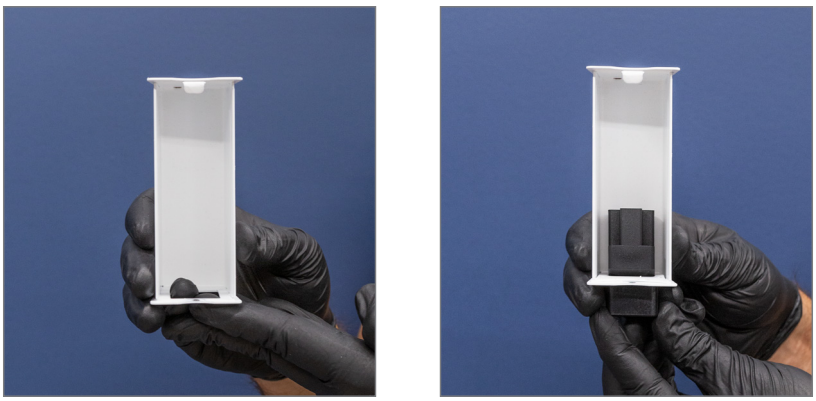

Figure 1

2. Connect the NEMA 5 PLUG to C14 CONVERTER then connect with cable USB TYPE A end comes from *GOOSENECK* to NEMA 5 PLUG. **(Figure 2)**

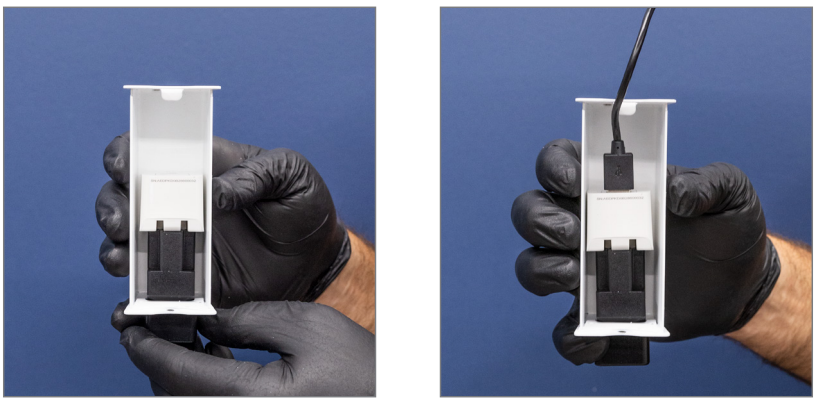

Figure 2

Section 3: Assembly

3. Insert the tab on the ENCLOSURE top into GOOSENECK mounting plate slot in an inclined manner then hold on the top of the ENCLOSURE and squeeze the ENCLOSURE bottom slowly to slide onto *TABLET HEAD MOUNT*. **(Figure 3)**

Figure 3

4. Insert the #6-32 Philips pan head screw through ENCLOSURE into *TABLET HEAD MOUNT*. **(Figure 4)**

Figure 4

Installing a Tablet

1. Unlock the tablet holder clamps by rotating the key and releasing the lever on back. Place the tablet diagonally between the two clamps so that they hold the corners of the tablet. Squeeze towards the inside to hold then secure by pressing the switch to "SECURE" side and lock the holder with KEY provided in the hardware kit. **(Figure 1)**

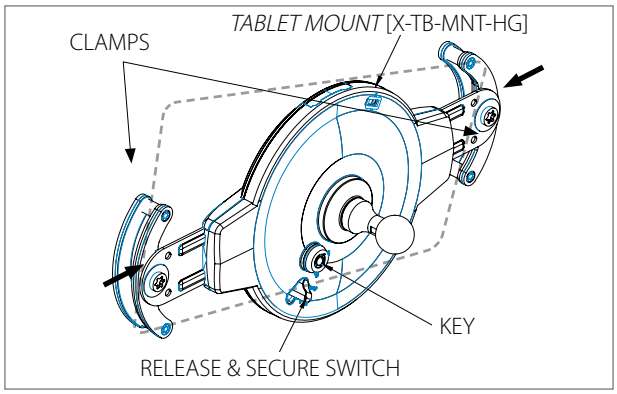

Figure 1

Section 3: Assembly

Adjustments

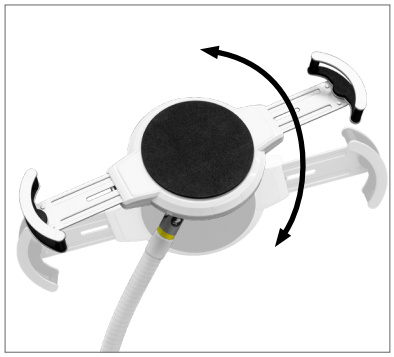

Adjust Tilt Angle

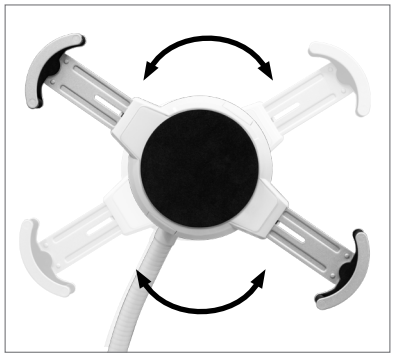

Rotate

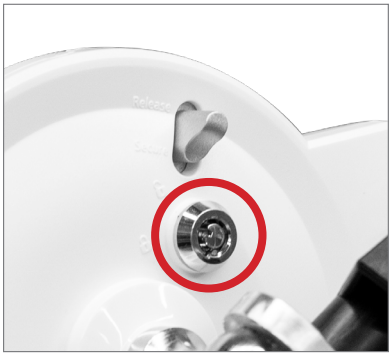

Security Lock

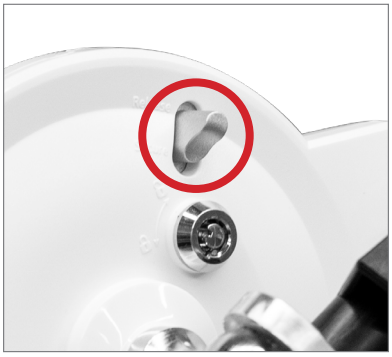

Bracket Lock

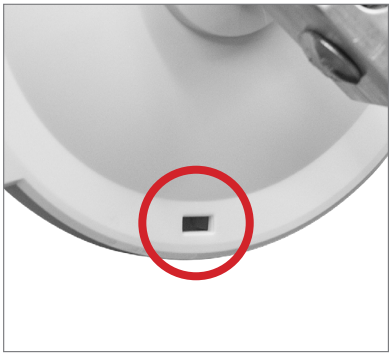

Kensington Lock

Section 3: Assembly

Mount the Handle (Optional)

WARNING: DO NOT TIGHTEN ONE SCREW ALL THE WAY PRIOR TO INSERTING THE OTHER. START BY INSERTING BOTH SCREWS HALF WAY, THEN TIGHTEN EACH SCREW INCREMENTALLY, ENSURING THAT THE TWO HALVES OF THE HANDLE REMAIN PARALLEL WITH ONE ANOTHER. FAILURE TO DO SO MAY CAUSE DAMAGE TO THE EQUIPMENT.

1. Place handle at desired height (typically 2" (5.08 cm) below the *POST ADAPTER*), place the *ROLL STAND HANDLE BACK PIECE* and *ROLL STAND HANDLE FRONT PIECE* around the *ROLL STAND POST*. Secure the *ROLL STAND HANDLE* in place by inserting the *HANDLE KIT SCREWS* through the back piece and tightening into the larger piece, using a #2 Phillips head screwdriver. **(Figure 1)**

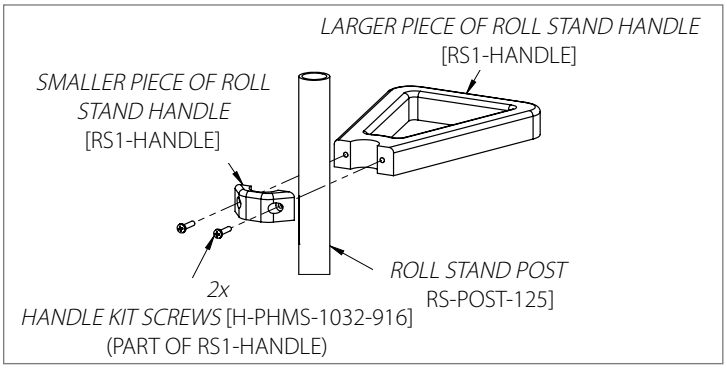

Figure 1

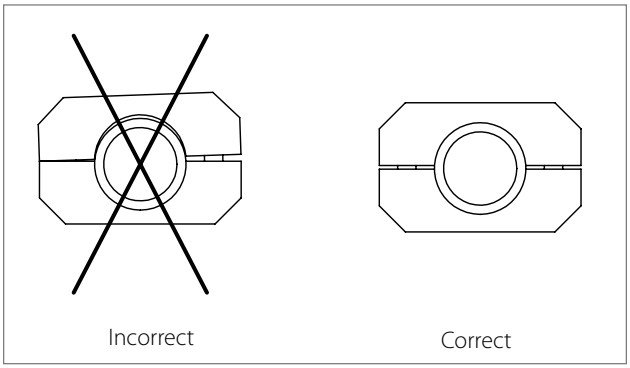

Figure 2

Installing Extender Plates for Larger Tablets (RS8-UPGRD-TB13)

Introduction

The purpose of this KIT is to upgrade the existing tablet mount to accommodate larger tablet range from 11" - 13.5" (27.9 cm - 34.3 cm) to 13.5" - 15.5" (34.3 cm - 39.4 cm) (corner to corner) size and thicker tablets or tablet case from 0.4" - 0.8" (1.02 cm - 2.03 cm) thick.

Installation Tools

#T10 & #T20 Torx Allen key
(Included in the KIT)

Hardware Kit

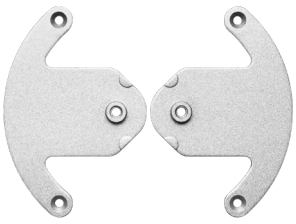

Extender plates

Spacers

Section 3: Assembly

1. Lock all casters first to keep the cart steady. **(Figure 1)**
2. Unlock the tablet mount clamps by rotating the KEY and releasing the lever on back. Safely remove the tablet device from the *TABLET MOUNT* and keep aside. **(Figure 2)**
3. Use the T20 Torx Allen key to disassemble the clamps from the *TABLET MOUNT*.

Figure 1

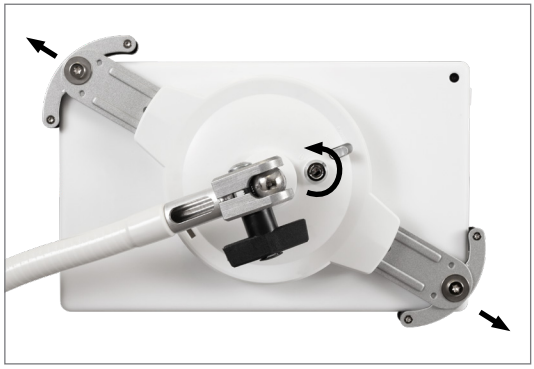

Figure 2

NOTE: Keep the hardware safe, these washers and screws will be reused.

Figure 3

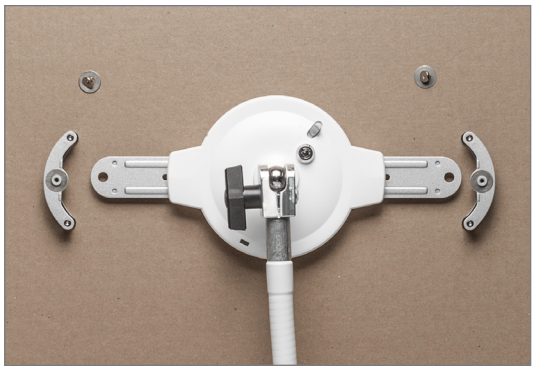

Figure 4

4. Use the T10 Torx Allen key to disassemble the clamps plates.

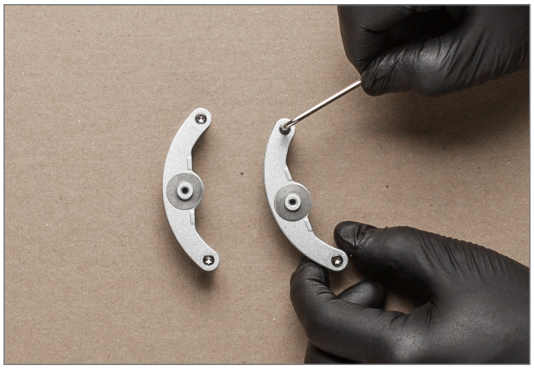

Figure 5

Section 3: Assembly

5. Replace the existing clamp plate (one with pem nut) **(Figure 6)** with new extender plate provide in the hardware kit. **(Figure 7)**

   NOTE: Make sure the plastic spacers are in place before assembling it.

Figure 6

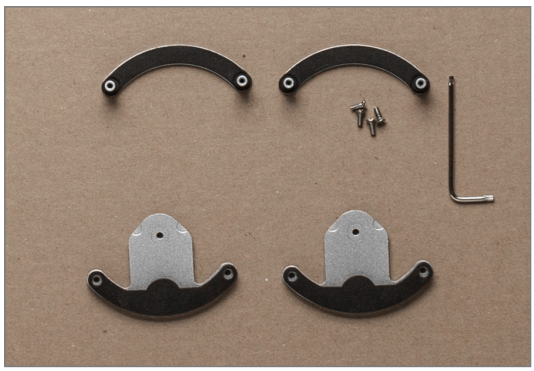

Figure 7

6. Put back the screws to assemble both the clamp plates using T10 Torx Allen key. **(Figure 8)**

   NOTE: Make sure the extender plate pem nut is facing out. **(Figure 9)**

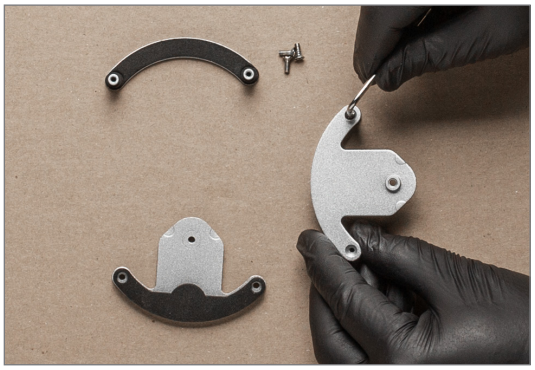

Figure 8

Figure 9

7. Repeat steps 3 to 6 for the other end of the clamp to replace the clamp plate with new extender plate.
8. Put back the clamps to tablet mount with T20 Torx Allen key.
9. After installation, the embossments outlined below are visible. Check by rotating the extension plate and ensure it stops at the embossments.

Section 3: Assembly

Figure 10

Figure 11

Before

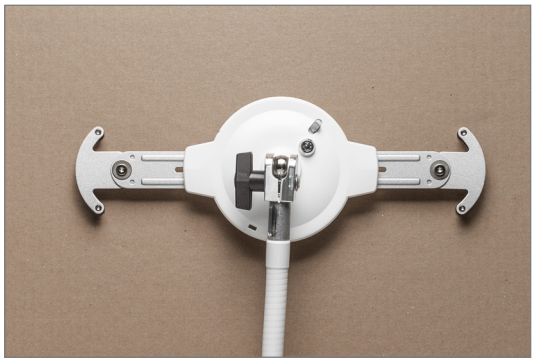

After

Instructions to Install Thicker Tablet Kit (RS8-UPGRD-TB13)

1. Lock all casters first to keep the cart steady. **(Figure 1)**
2. Unlock the *TABLET MOUNT* clamps by rotating the KEY and releasing the lever on back. Safely remove the tablet device from the *TABLET MOUNT* and keep aside. **(Figure 2)**

Figure 1

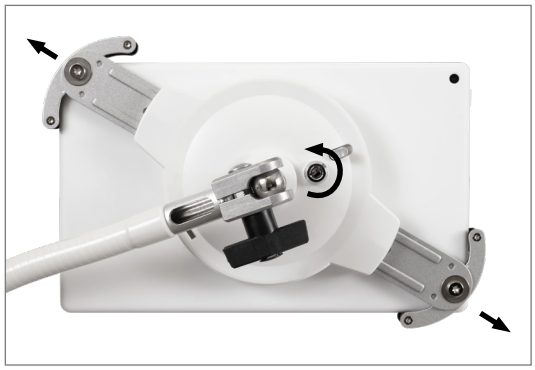

Figure 2

3. Use the T10 Torx Allen key to disassemble the clamps from the *TABLET MOUNT*. **(Figure 3)**

NOTE: Keep the hardware safe, these screws will be reused.

Section 3: Assembly

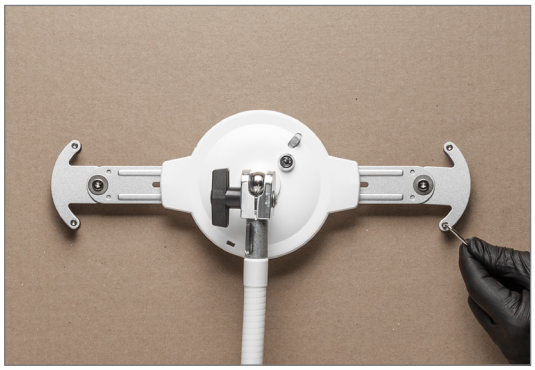

Figure 3

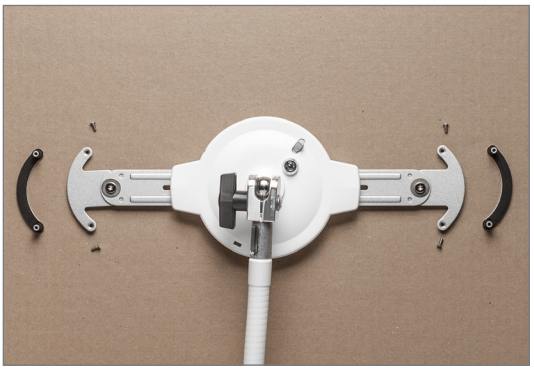

Figure 4

4. Remove the two rubber sleeves.

NOTE: Please retained the existing shorter spacer and screws when swapping with longer spacer (from KIT) and screws (from KIT). keep it safe to downgrade the tablet back to thinner size (0.4" [1.02 cm] thickness tablet) if needed.

Figure 5

5. Insert the new spacer from the KIT onto the plate as shown in the figure. **(Figure 6)**
6. Now put back the plate with new Spacer on the *TABLET MOUNT* and secure with new screw provided in the KIT. **(Figure 7)**

Figure 6

Figure 7

Mounting the Basket (Optional)

WARNING: DO NOT TIGHTEN ONE SCREW ALL THE WAY PRIOR TO INSERTING THE OTHERS. START BY INSERTING ALL SCREWS HALF WAY, THEN TIGHTEN EACH SCREW INCREMENTALLY IN A CROSS PATTERN, ENSURING THAT THE POST CLAMPS REMAIN PARALLEL. FAILURE TO DO SO MAY CAUSE DAMAGE TO THE EQUIPMENT. **(Figure 2)**

NOTE: *ROLL STAND BASKETS* are rated to support up to 10 lbs (4.54 kg).

1. Remove the *BASKET POLE CLAMP FRONT HALF* from the *BASKET POLE CLAMP BACK HALF* by unscrewing the four *REAR BASKET SCREWS* (BLACK), using a 1/2" (1.27 cm) Socket wrench. **(Figure 1)**
2. Once at desired height (typically 2" [5.08 cm] below the *ROLL STAND BASKET*), place the *ROLL STAND POST* between the front and back clamp halves and replace the screws using a 3/16" (47.6 mm) Hex key in a cross pattern. **(Figures 1 and 3)**

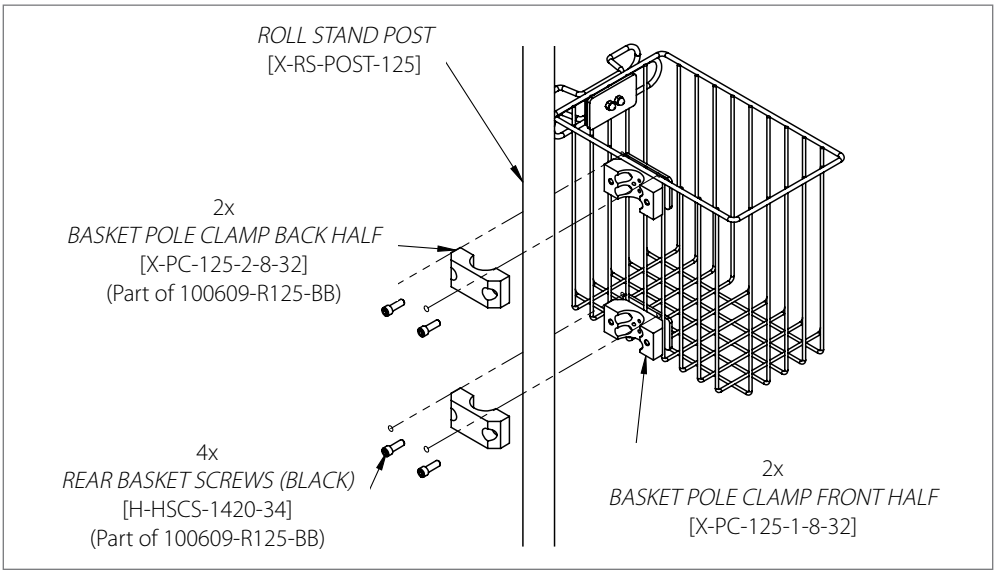

Figure 1

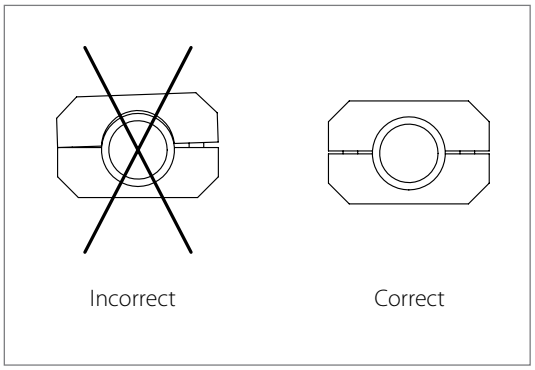

Figure 2

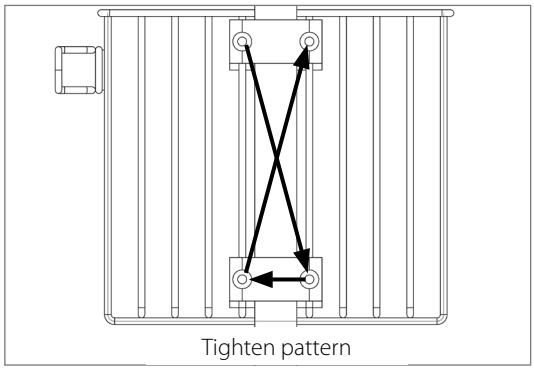

Figure 3

Section 4: Troubleshooting, Maintenance and Product Classification

Troubleshooting Guide

Symptom	Solution
Roll Stand is difficult to move	Check to ensure all casters are in an unlocked position (levers up). If any problem persists after troubleshooting, please contact Amico Accessories at 1.877.264.2697 or info@amico-accessories.com.
Roll Stand moves when it should not	Check to ensure all casters are in an locked position (levers down). If any problem persists after troubleshooting, please contact Amico Accessories at 1.877.264.2697 or info@amico-accessories.com.
Tablet is drooping	Tighten tablet holder mount on ball-joint by turning the black wing-nut clockwise. If any problem persists after troubleshooting, please contact Amico Accessories at 1.877.264.2697 or info@amico-accessories.com.
Handle is loose	Ensure 2x screws are tight, using a #2 Phillips head screwdriver. If any problem persists after troubleshooting, please contact Amico Accessories at 1.877.264.2697 or info@amico-accessories.com.
Basket is loose	Ensure 4x screws are tight, using a 3/16" (47.6 mm) Hex key. If any problem persists after troubleshooting, please contact Amico Accessories at 1-877-264-2697 or info@amico-accessories.com.

Preventative Maintenance

It is recommended that once every **three (3) months**, all bolts and screws are checked to ensure that they are tight. Visually inspect product for signs of damage based on degree of usage.

Cleaning

⚠ **WARNING:** THE CLEANING CHEMICALS AND METHODS BELOW ARE NOT MEANT FOR INFECTION CONTROL. IT SHALL BE THE RESPONSIBILITY OF THE FACILITY, CLINIC, HOSPITAL OR THE INFECTION CONTROL OFFICER TO SANITIZE THE EQUIPMENT.

⚠ **WARNING:** PLEASE DO NOT SPRAY ANY CHEMICAL DIRECTLY ONTO RS MODELS. APPLY ONTO A SOFT CLOTH AND WIPE CLEAN TO PREVENT CHEMICALS GETTING INTO THE INTERNAL COMPONENTS OF RS MODELS.

This product can be cleaned with most mild non-abrasive solutions commonly used in the hospital environment (e.g. diluted bleach, ammonia, alcohol). The surface finish will be permanently damaged by strong chemical and solvents such as acetone and trichloroethylene. Steel wool or other abrasive material should never be used. Damage caused by the use of unapproved substances or processes will not be warranted. It is recommended that you test any cleaning solution on a small area of the RS model that is not visible to verify compatibility. Never submerge the RS model and do not allow liquids to enter. Wipe any cleaning agents immediately using a water-dampened cloth. Dry thoroughly after.

Acetone

Figure 1

No Acetone

Acetone is a colorless, mobile, flammable liquid

Trichloroethylene

Figure 2

No Trichloroethylene

Trichloroethylene is a chlorinated hydrocarbon commonly used as an industrial solvent

Warranty Policy - Gooseneck Roll Stand

Amico Accessories Inc. warrants all mounting accessories to be free from defects in material and workmanship for a period of twelve (12) months from the date of shipment. Within this period Amico Accessories Inc. will repair or replace any part which is proven to be defective.

Amico Accessories Inc. will warrant its materials to be free from defect for an additional period of four (4) years, (five [5] years from the date of shipment). Within this period, Amico Accessories Inc. will replace any part which is proven to be defective, at no charge. Shipping and Installation costs after the first twelve (12) months will be borne by the Customer.

This warranty is valid only when the product has been properly installed according to Amico Accessories Inc. specifications, used in a normal manner and serviced according to factory recommendations. It does not cover products that are not manufactured by Amico Accessories Inc. It does not cover failures due to damage which occurs in shipments or failures which result from accidents, misuse, abuse, neglect, mishandling, alteration, misapplication or damage that may be attributable to acts of God.

Amico Accessories Inc. shall not be liable for incidental or consequential damages resulting from use of equipment.

All claims for warranty must first be approved by Amico Accessories Inc. A valid Return Goods Authorization (RGA) number must be obtained from Amico Accessories Inc. prior to commencement of any service work. Warranty work, which has not been pre-authorized by Amico Accessories Inc., will not be reimbursed.

AMICO ACCESSORIES INC. DOES NOT HONOR VERBAL STATEMENTS CONCERNING THE WARRANTY.

The distributor and/or dealer are not sanctioned to create verbal warranties about the product described in this agreement. Any statements will not be honored or be made part of the agreement of sale. This document is the final complete and exclusive terms of the agreement.

THIS WARRANTY IS INCLUSIVE AND REPLACES ALL OTHER WARRANTIES.

Amico Accessories Inc. shall not, under any circumstances be liable for incidental or consequential damages including, but not limited to, profit, loss of sales or injuries to person(s) or property. Correction of noncompliance as noted above will result in completion of all liabilities of Amico Accessories Inc., whether based on agreement, neglect or changed materials, designs or specifications without notice.

All claims for warranty must first be approved by Amico Accessories Inc. Service Department: accessories@amico.com or 1.877.264.2697. A valid Return Goods Authorization number must be obtained from Amico Accessories Inc. prior to commencement of any warranty claim.

www.amico.com

Amico Accessories Inc. | 85 Fulton Way, Richmond Hill, ON L4B 2N4, Canada
Toll Free Tel: 1.877.264.2697 | Tel: 905.763.7778 | Fax: 905.763.8587
Email: info@amico-accessories.com | www.amico.com